FEEDING CONCEPTS

15235 Herriman Blvd. • Noblesville, IN 46060
(317) 773-2040

GCH MACHINERY

DISK FEEDER

INSTALLATION & OPERATING MANUAL

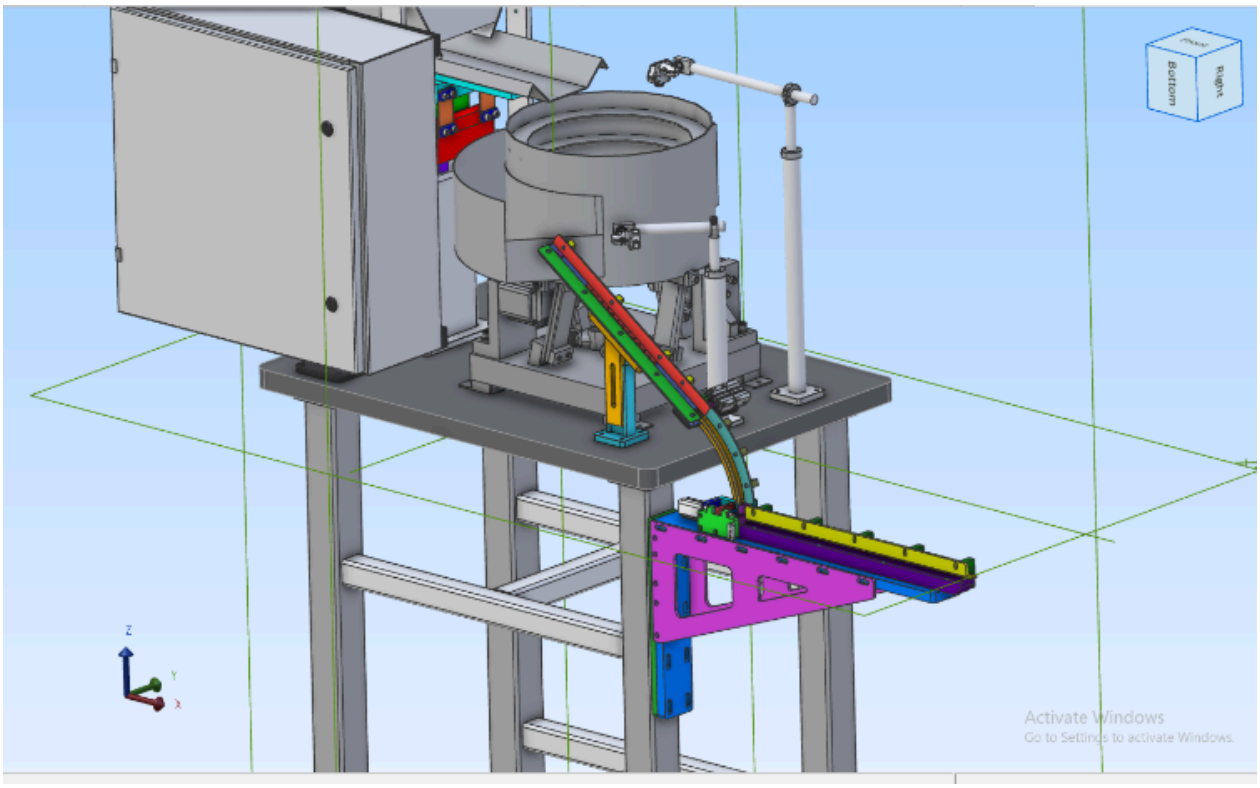

JOB NO. FC-26-23385

WORKING DRAFT — TECHNICAL REVIEW

Table of Contents

1. Machine Installation Instructions

2. Machine Start-up / Operation Instructions

3. Changeover Instructions

4. Machine Faults and Alarm Interface

5. System Specifications and Control Interface

6. General Maintenance and Troubleshooting

7. Drawings and Reference Documents

8. Engineering Review Items — Remove Before Issue

Page numbers to be assigned after illustrations and final drawings are inserted.

1. Machine Installation Instructions

The feeder must be positioned, leveled, connected, and inspected before initial operation. Only qualified personnel should perform electrical connections, troubleshooting inside the enclosure, or servicing.

1. Move the machine to its intended operating location. Keep the hopper, bowl, gravity track, escapement, and pusher accessible for routine loading and adjustment.

2. Level the feeder using the adjustable leveling feet beneath the frame. Verify that the machine is stable and that its weight is distributed evenly across all feet.

3. Connect the specified 120 VAC, 50/60 Hz supply. Refer to the electrical schematic for connection details; do not substitute an unverified connection.

4. After electrical installation is complete and the enclosure is secured, energize the system and verify the expected control-panel indicators and control power.

5. Connect clean, dry compressed air to the main regulator. Adjust the regulator to 60 PSI.

IMPORTANT: Do not change the factory-adjusted air-jet flow controls without direction from Feeding Concepts or an approved setup specification.

6. Before starting, verify that the feeder tooling is secure, no foreign material is present in the tracks or escapement, and the installed tooling matches the disk size being processed.

7. Confirm that the customer-interface wiring is configured correctly for local or remote operation. See Section 5 and the Signal Interface drawing.

2. Machine Start-up / Operation Instructions

1. Verify that electrical power is available and the main air regulator reads 60 PSI.

2. Confirm that the bowl, gravity-track guides, linear-track guides, and pusher nest are configured for the selected disk. Refer to Section 3 and the Disk Feeder Changeover Settings sheet.

3. Load the hopper with the appropriate parts. Check that no mixed sizes or foreign material are present.

4. Press CYCLE RESET to clear resettable faults and return the escapement to its reset position. Following a CYCLE STOP, reset the machine before restarting.

5. Press CYCLE START. The bowl feeder and hopper should begin feeding parts.

6. Observe part flow from the bowl to the gravity track. The gravity-track-full sensor is used to stop vibratory feeding when the track is filled; feeding resumes as needed when capacity becomes available.

7. The escapement is commanded through the customer remote signal. The original operating notes state that a single command pulse cycles one part and that a continuously held signal permits repeated cycling at approximately 45 parts/minute. Verify the behavior during customer integration and acceptance testing.

8. Press CYCLE STOP to stop the feeders and pneumatic cycling. Inspect any jam or fault condition before using CYCLE RESET and restarting.

NOTE: Keep hands and tools away from the escapement, pusher, and vibrating components during operation. Stop and isolate the machine before clearing jams or making mechanical adjustments.

3. Changeover Instructions

The system includes adjustable confinement tooling on the bowl, gravity track, linear track, and pusher. The small-disk and large-disk settings below are the recorded test/changeover values for job FC-26-23385; adjustments should be verified against actual production parts.

Changeover Settings Sheet — Small and Large Disks

3.1 Changeover Preparation

1. Press CYCLE STOP. Before reaching into or adjusting tooling, isolate and bleed compressed air, following the site's lockout/tagout procedure. Verify that the machine cannot move.

2. Clear remaining parts from the hopper, bowl, gravity track, escapement, and pusher nest. Confirm the required disk size.

3. Reposition the confinement tooling and change the appropriate pusher-nest confinement as described below.

4. Set the bowl and hopper feeder amplitudes to the recorded starting values. Restore utilities only after mechanical adjustments are complete and guarding is in place.

5. Run parts slowly under controlled setup conditions. Check clearance through every transition, verify the pusher retracts past the nest and advances fully to the nest confinement, and adjust as required for reliable part flow.

3.2 Small-Disk Settings

Main regulator: 60 PSI.

Bowl side confinement: Approximately 1 mm open from fully in. During testing, fully in was too tight for some oversize parts.

Bowl top confinement: Fully down.

Gravity-track side confinement: Fully in.

Gravity-track top confinement: Approximately 1 mm above fully down.

Linear-track side confinement: Set to the part; approximately 1 mm open from fully in was used during testing to clear oversized parts.

Linear-track top confinement: Fully up or removed. The recorded test setup removed the confinement/standoffs to improve visibility of part flow; confirm the intended production configuration.

Pusher nest confinement: Small-disk confinement.

Pusher stroke adjusters: Set to the part; the shuttle must retract clear of the nest and fully contact the nest confinement when advanced.

Bowl feeder amplitude: 15%. Hopper amplitude: 22%.

3.3 Large-Disk Settings

Main regulator: 60 PSI.

Bowl side confinement: Fully out.

Bowl top confinement: Fully up.

Gravity-track side confinement: Fully out.

Gravity-track top confinement: Fully up.

Linear-track side confinement: Fully out.

Linear-track top confinement: Set to the part; the recorded test position was approximately 0.030 in. below the maximum raised position.

Pusher nest confinement: Large-disk confinement.

Pusher stroke adjusters: Set to the part; the shuttle must retract clear of the nest and fully contact the nest confinement when advanced.

Bowl feeder amplitude: 19%.

Hopper amplitude: 22%.

3.4 Escapement and Control Adjustments

The two-finger toggle uses a changeable rear separation finger. The original machine notes identify alternate mounting holes on the toggle bracket for this adjustment. Confirm the correct rear-finger position against the installed tooling and part geometry.

The bowl feeder amplitude can be adjusted using the up/down controls on the Rodix feeder control. Use the values in Sections 3.2 and 3.3 as starting settings, then verify actual part flow.

IMPORTANT: Disconnect and bleed compressed air before any escapement changeover adjustment. The 60 PSI main regulator setting is common to both disk sizes; it is not a changeover adjustment.

4. Machine Faults and Alarm Interface

The machine includes an Alarm/Fault interface for abnormal operating conditions. The electrical schematic identifies a PLC alarm/fault output, with bowl or shuttle jam conditions given as examples.

If feeding or pneumatic cycling stops unexpectedly, check for trapped parts, loss of air pressure, an obstructed gravity track, or an uncleared fault before resetting.

5. System Specifications and Control Interface

5.1 General Specifications

Machine: GCH Disk Feeder | Job: FC-26-23385 | Manufacturer: Feeding Concepts

Electrical supply: 120 VAC, 50/60 Hz (per operating draft and electrical schematic).

Control voltage: 24 VDC (per electrical schematic).

Compressed air: Clean, dry air; 60 PSI at main regulator.

Feeder controls: Rodix FC-200 units for bowl and hopper (per electrical schematic).

PLC: Allen-Bradley Micro820, 2080-L20E-20QBB (per electrical schematic).

Pneumatic actuators: Escapement toggle and pusher shuttle (per electrical schematic).

5.2 Customer Signals

Master enable: The Signal Interface drawing shows a factory run jumper and a customer relay/contact option for remote enable. Follow the wiring drawing when changing from the factory jumper to customer control.

Escapement cycle request: A customer relay/contact signal commands escapement cycling. The interface drawing notes that the escapement cycles while this input is enabled.

Alarm/fault output: The electrical schematic provides a customer-facing fault indication. Refer to the Signal Interface drawing for its terminals and contact arrangement.

NOTE: For terminal numbers, current ratings, wire sizes, and precise wiring requirements, use the issued electrical drawings rather than this operating summary.

6. General Maintenance and Troubleshooting

6.1 Routine Operator Checks

1. With the machine safely stopped and isolated, remove accumulated parts and debris from accessible tooling and track surfaces.

2. Inspect confinement hardware for looseness or movement from the recorded changeover settings.

3. Check air supply pressure and visually inspect accessible tubing and fittings for damage or leaks.

4. Check that the gravity-track-full sensor and pusher-nest part-present sensor are clean and unobstructed.

5. Confirm that feeders and cylinders operate without unusual impact, binding, or repeated part jams.

6.2 Troubleshooting Guide

No feeder motion — Verify CYCLE START, availability of main power and the correct master-enable state; check the control system for faults.

Gravity track does not refill — Check part supply, bowl amplitude, tooling clearance, and the full-track sensor condition.

Parts jam at changeover tooling — Confirm selected disk size, confinement settings, rear separation finger, and pusher stroke limits.

Escapement does not cycle — Verify air pressure, the customer cycle request, the reset state, and any active faults. Consult electrical/pneumatic drawings before servicing.

Repeated alarms or unexpected stops — Clear the underlying obstruction or fault, then use CYCLE RESET before restarting.

MAINTENANCE: Specific lubrication, inspection intervals, and replacement parts are not yet documented for this unit. Obtain the applicable approved service requirements before adding them.

7. Drawings and Reference Documents

System layout: FC-26-23385 layout drawing (provided separately for inclusion as a figure or appendix).

Electrical package: Total Grinding Solution GCH FC-26-23385 (9-page EPLAN drawing package).

Changeover reference: Total Grinding/GCH FC-26-23385 Disk Feeder Changeover (small/large disk settings).

Total Grinding/GCH FC-26-23385 Disk Feeder Changeover

Open the electrical drawing package in Google Drive

For customer release: insert the approved machine photo(s), dimensioned layout, complete electrical drawings, and any approved pneumatic schematic into the final illustrated manual or its appendices.